Model No.4350CT JIG SAW

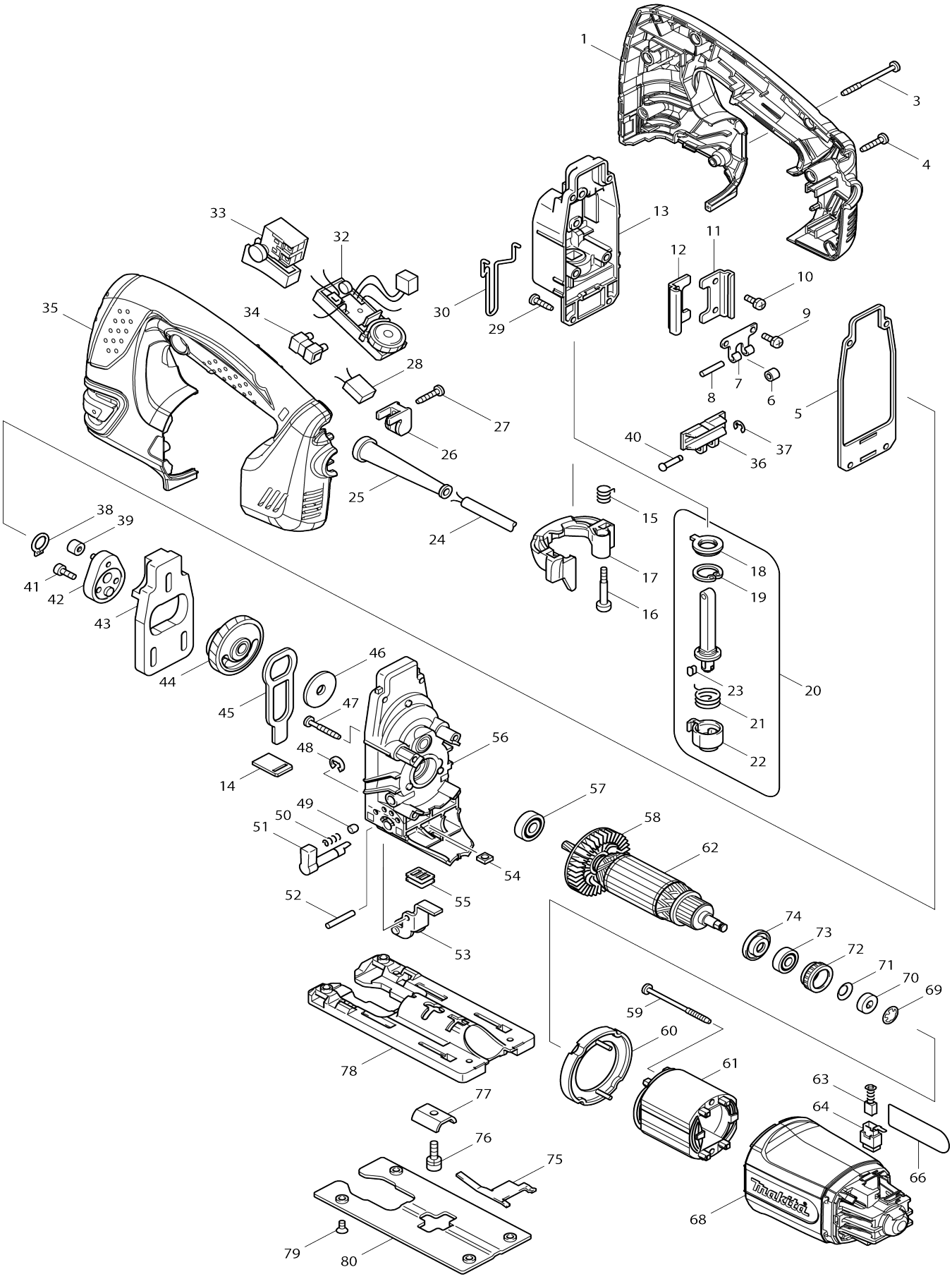

Model No.4350CT JIG SAW

Item No.	Parts No.	Description	Interchangeability	Q'ty	New/ Old	Note1	Note2
001	188286-7	HANDLE SET		1			
001		INC. 35					
002	265995-6	TAPPING SCREW 4X18		1			
003	266091-3	TAPPING SCREW 4X50		1			
004	265995-6	TAPPING SCREW 4X18		5			
005	442138-9	PACKING		1			
006	214031-5	PLANE BEARING 4		1			
007	232207-2	LEAF SPRING		1			
008	256117-9	PIN 4		1			
009	911111-5	PAN HEAD SCREW M4X10 WITH W		2			
010	911111-5	PAN HEAD SCREW M4X10 WITH W		2			
011	345240-6	LINEAR GUIDE		1			
012	345240-6	LINEAR GUIDE		1			
013	153338-3	GEAR HOUSING COVER COMPLETE		1			
C10	253313-0	THIN WASHER 14		1			
C20	257250-0	RING 20		1			
C30	421815-6	DUST SEAL 8		1			
014	417839-8	SEAL PLATE		1			
015	231659-4	TORSION SPRING 6		1			
016	265026-1	+ PAN HEAD SCREW M4		1			
017	419820-5	TOOL OPENER		1			
018	421817-2	DUST COVER		1			
019	962068-3	RETAINING RING R-18		1			
020	135060-4	ROD ASS'Y		1			
C10	165326-8	ROD		1			
020		INC. 18,19,21-23					
021	231660-9	TORSION SPRING 15		1			
022	310136-0	BLADE HOLDER		1			
023	310135-2	PUSH PIN		1			
024	665394-6	POWER SUPPLY CORD 1.0-2-2.5		1			
025	682559-5	CORD GUARD 8		1			
026	687260-7	STRAIN RELIEF		1			
027	265995-6	TAPPING SCREW 4X18		1			
028	645149-5	NOISE SUPPRESSOR		1			
029	266034-5	TAPPING SCREW CT 4X16		4			
030	324233-6	SAFETY WIRE		1			
032	631768-3	CONTROLLER		1			
033	650202-4	SWITCH SGEL115CDY-8		1			
034	654532-5	TERMINAL BLOCK 1P		1			
035	188286-7	HANDLE SET		1			
035		INC. 1					
036	310134-4	SLIDER		1			
037	961017-7	STOP RING E-3		1			
038	961004-6	RETAINING RING (EXT) S-8		1			
039	212014-9	NEEDLE BEARING 407		1	*		

039-1	212092-9	NEEDLE BEARING 407	O	1			
040	268090-1	PIN 4		1			
041	265353-6	HEX. SOCKET HEAD BOLT M4X12		2	*		
041-1	265D42-7	HEX. SOCKET HEAD BOLT M4X12	O	2			
042	153336-7	CRANK COMPLETE		1			
043	313108-4	BALANCE PLATE		1			
044	153335-9	GEAR COMPLETE		1			
C10	212043-2	NEEDLE BEARING 810		2			
045	345235-9	PUSH PLATE		1			
046	253877-4	FLAT WASHER 8		1			
047	266050-7	TAPPING SCREW 4X30		4			
048	961018-5	STOP RING E-5		1			
049	286032-3	CAP 5		1			
050	233139-6	COMPRESSION SPRING 3		1			
051	272244-4	LEVER 17		1	*		
051-1	272280-0	LEVER 17	<	1			
052	268063-4	PIN 4		1			
053	153334-1	RETAINER COMPLETE		1			
054	252171-1	SQUARE NUT M5-8		1			
055	421816-4	DUST SEAL		1			
056	153337-5	GEAR HOUSING COMPLETE		1			
057	210005-4	BALL BEARING 608DDW		1			
058	241881-5	FAN 52		1			
059	266052-3	TAPPING SCREW 4X60		2			
060	417838-0	BAFFLE PLATE		1			
061	593508-6	FIELD ASS'Y 220-240V		1	*		
C10	654069-2	RECEPTACLE		2	*		
061-1	599125-0	FIELD ASS'Y 240V	<	1			
C10	654069-2	RECEPTACLE		2			
062	517398-3	ARMATURE ASS'Y 220-240V		1			
062		INC. 57,58,73,74					
063	191962-4	CARBON BRUSH CB-419		1	*		
063-1	195015-1	CARBON BRUSH SET CB-419	O	1			
064	643936-6	BRUSH HOLDER		2			
066	863664-9	4350CT NAME PLATE		1			
068	419886-5	MOTOR HOUSING		1			
069	259039-2	SELF LOCK 6		1			
070	688117-5	MAGNET SLEEVE		1			
071	267756-0	WAVE WASHER 6		1			
072	421494-0	RUBBER RING 19		1			
073	211021-9	BALL BEARING 607LLB		1			
074	681636-0	INSULATION WASHER		1			
075	232208-0	LEAF SPRING		1			
076	922226-3	HEX. SOCKET HEAD BOLT M5X18		1			
077	345237-5	CRANK PLATE		1			
078	317565-8	BASE		1			
079	912107-9	COUNTERSUNK HEAD SCREW M4 X8		4			
080	345238-3	BASE PLATE		1			
A01	415524-7	ANTI-SPLINTERING DEVICE		1			
A02	417852-6	COVER PLATE		1			
A03-1	A-85737	JIGSAW BLADE NO.B22		1			

A04-1	A-85628	JIGSAW BLADE NO.B10		1			
A05-1	A-85793	JIGSAW BLADE NO.BR13		1			
A06	783202-0	HEX. WRENCH 4		1			
A07	821549-5	CONNECTOR PLASTIC CASE (TYP E1)		1			
C10	453974-8	LATCH		4			
A08	417853-4	DUST NOZZLE		1			
A09	837803-7	INNER TRAY		1			
A10	800M80-2	4350CTJ INDICATION LABEL		1			
A11	800M81-0	4350CTJ PLASTIC CASE LABEL		2			
F01	192516-0	GUIDE RAIL		1			
F02	192557-6	ANTI-SPLITERING DEVICE		1			
F04	193516-3	GUIDE RULE SET		1			
C10	165217-3	GUIDE RULE		1			
C20	271601-3	KNOB 20		1			
C30	323802-0	GUIDE PIN		1			
C40	922207-7	HEX. SOCKET HEAD BOLT M5X10		1			
F05-1	193517-1	GUIDE RAIL ADAPTER SET	O	1			
C11	265785-7	THUMB SCREW M5X10	<	1			
C20	347393-7	RULE BAR		1			
C30	417894-0	GUIDE RAIL ADAPTER		1			
F06	194416-0	SHEET 10000 SET		1			
F07	194417-8	RUBBER SHEET 10000 SET		1			
F08	194418-6	POSITION SHEET 1400 SET		1			
F10	194367-7	GUIDE RAIL 3000 SET		1			
C10	413102-7	SEAT 3000		2			
C20	423360-7	POSITION SHEET 3000		1			
C30	423362-3	RUBBER SEAT 3000		2			
C40	819212-2	MAKITA LOGO LABEL		1			
F11	194368-5	GUIDE RAIL 1400 SET		1			
C10	413101-9	SEAT 1400		2			
C20	423359-2	POSITION SHEET 1400		1			
C30	423361-5	RUBBEER SEAT 1400		2			
C40	819212-2	MAKITA LOGO LABEL		1			
F12	194925-9	GUIDE RAIL 1900 SET		1			
C10	423386-9	POSITION SHEET 1900		1			
C20	423390-8	RUBBER SHEET 1900		2			
C30	451330-6	SHEET 1900		2			
C40	819212-2	MAKITA LOGO LABEL		1			
F13	194910-2	POSITION SHEET 1900 SET		1			
F15-2	197252-3	GUIDE RAIL ADAPTER SET	O	1			
F16	199140-0	GUIDE RAIL 1000 SET		1			
F17	199141-8	GUIDE RAIL 1500 SET		1			