Model No.UB001G CORDLESS BLOWER

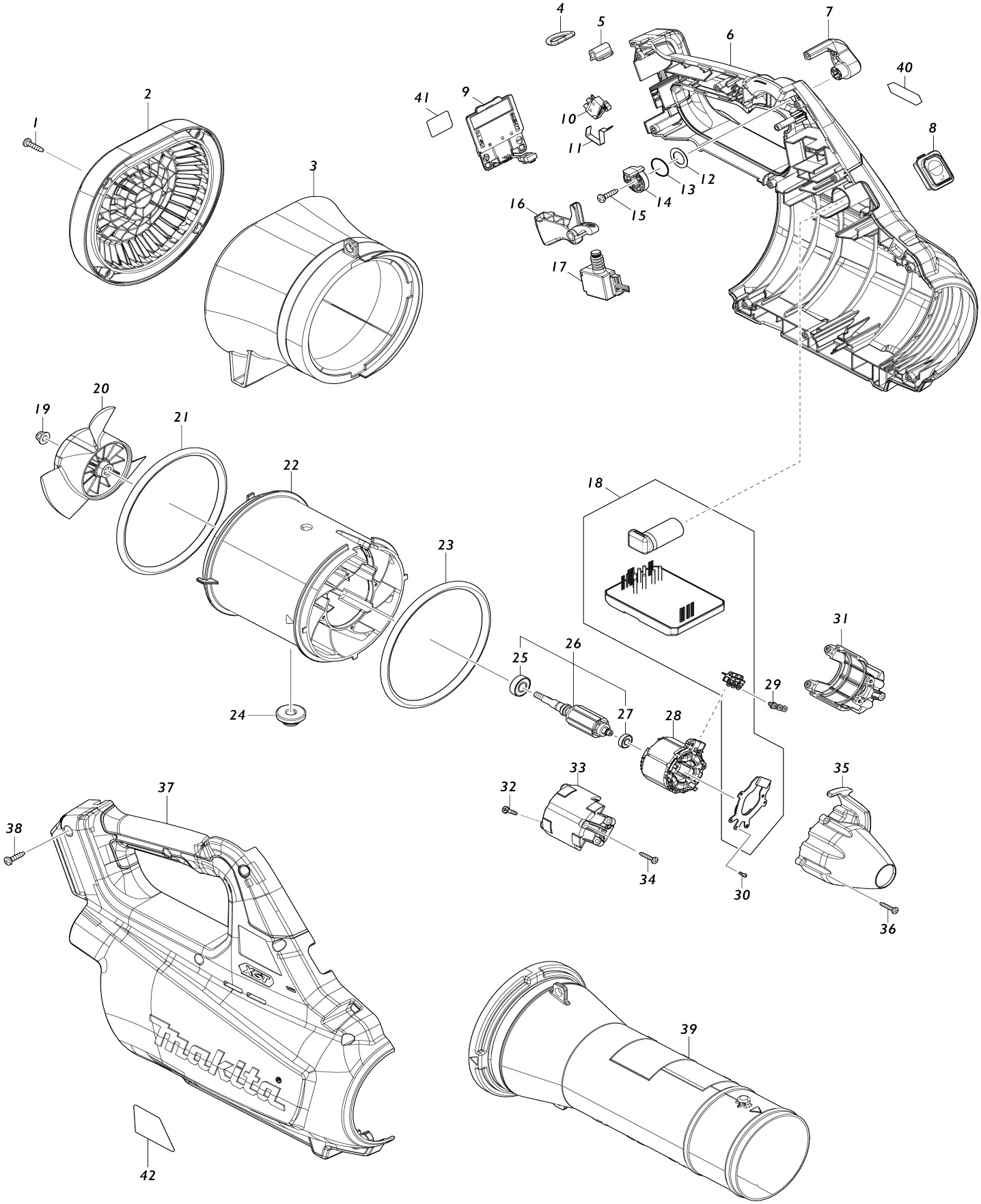

Model No.UB001G CORDLESS BLOWER

Item No.	Parts No.	Description	Interchangeability	Q'ty	New/ Old	Note1	Note2
001	266326-2	TAPPING SCREW 4X18		4			
002	413368-9	REAR COVER		1	*		
003	140Y68-5	REAR HOUSING COMPLETE		1	*		
C10	422668-6	SPONGE		4	*		
003-1	122C63-5	REAR HOUSING ASSEMBLY	S	1			
C10	422668-6	SPONGE		4			
003-1		INC. 1					
004	327742-4	D RING 20		1			
005	347783-4	RING SUPPORT		1			
006	183T07-2	HOUSING SET		1	*		
C10	263005-3	RUBBER PIN 6		2	*		
C20	8011Y4-4	CAUTION LABEL		1	*		
006		INC. 37			*		
006-1	1831D3-4	HOUSING SET	O	1			
C10	263005-3	RUBBER PIN 6		2			
C20	8012T7-9	CAUTION LABEL	O	1			
006-1		INC. 37					
007	412755-9	CONTROL LEVER		1			
008	140X08-7	SWITCH CIRCUIT COMPLETE		1			
C10	810D46-0	SWITCH LABEL		1			
009	632P65-6	TERMINAL UNIT		1			
010	632L48-2	SWITCH UNIT		1			
011	232634-3	LEAF SPRING		1			
012	253798-0	FLAT WASHER 13		1			
013	213154-6	O RING 14		1			
014	412754-1	LINK		1			
015	266326-2	TAPPING SCREW 4X18		1			
016	412756-7	SWITCH LEVER		1			
017	651496-4	SWITCH C3JR-1AT-PAXD3		1			
018	620E14-9	CONTROLLER		1			
019	252286-4	COLLARED HEX.LOCK NUT M5-8		1			
020	240177-1	FAN 110		1			
021	424721-4	RUBBER RING 115		1			
022	413366-3	FAN HOUSING		1			
023	424721-4	RUBBER RING 115		1			
024	424194-1	RUBBER RING 8		1			
025	210040-2	BALL BEARING 698LLU		1			
026	519580-0	ROTOR ASS'Y		1			
026		INC. 25,27					
027	211157-4	BALL BEARING 695ZZ		1			
028	629A49-3	STATOR		1			
029	652069-6	FLAT HEAD SCREW M3X6		3			
030	266490-9	TAPPING SCREW PT 2X6		3			
031	183M64-8	MOTOR HOUSING SET		1			
031		INC. 33					
032	266130-9	TAPPING SCREW BIND PT 3X16		4	*		
032-1	266429-2	TAPPING SCREW 3X16	O	4			

033	183M64-8	MOTOR HOUSING SET		1			
033		INC. 31					
034	266130-9	TAPPING SCREW BIND PT 3X16		2	*		
034-1	266429-2	TAPPING SCREW 3X16	O	2			
035	413365-5	CAP		1			
036	266130-9	TAPPING SCREW BIND PT 3X16		4	*		
036-1	266429-2	TAPPING SCREW 3X16	O	4			
037	183T07-2	HOUSING SET		1	*		
C10	263005-3	RUBBER PIN 6		2	*		
C20	8011Y4-4	CAUTION LABEL		1	*		
037		INC. 6			*		
037-1	1831D3-4	HOUSING SET	O	1			
C10	263005-3	RUBBER PIN 6		2			
C20	8012T7-9	CAUTION LABEL	O	1			
037-1		INC. 6					
038	266326-2	TAPPING SCREW 4X18		10			
039	413367-1	FRONT PIPE		1			
040	8030S0-0	XGT LOGO LABEL		1			
041	811D71-4	UB001G SERIAL NO. LABEL		1			
042	811D64-1	UB001G NAME PLATE		1			
A01	166094-6	SHOULDER BELT		1	*		
A01-1	122J43-3	BAND ASSEMBLY	O	1			
C10	162E18-0	CUSHION COMPLETE		1			
C20	162E17-2	BLOWER BAND		1			
A02	412758-3	END NOZZLE 80		1	*		
A02-1	191P97-7	END NOZZLE 80 SET	O	1			
A03	191L96-5	ADAPTER PIPE 85-72 SET		1			
A04	183P97-1	EXTENSION NOZZLE SET		1	*		
A04-1	197888-8	EXTENSION NOZZLE SET	O	1			
A05	183P98-9	FLAT NOZZLE SET		1	*		
A05-1	197889-6	FLAT NOZZLE SET	O	1			
A06B	***DC40RA	DC40RA FAST CHARGER		1			
A06B		COMPO-PARTS					
A07B	412393-7	BATTERY COVER		1	*		
A08B	191B26-6	BATTERY BL4040 SET		1			
E01	8031T1-1	SOUND LABEL		1			
F02	191B03-8	GUTTER NOZZLE SET		1			
F03	191L96-5	ADAPTER PIPE 85-72 SET		1			
F05	197888-8	EXTENSION NOZZLE SET		1			
F06	197889-6	FLAT NOZZLE SET		1			