Model No.RP2300FC ROUTER

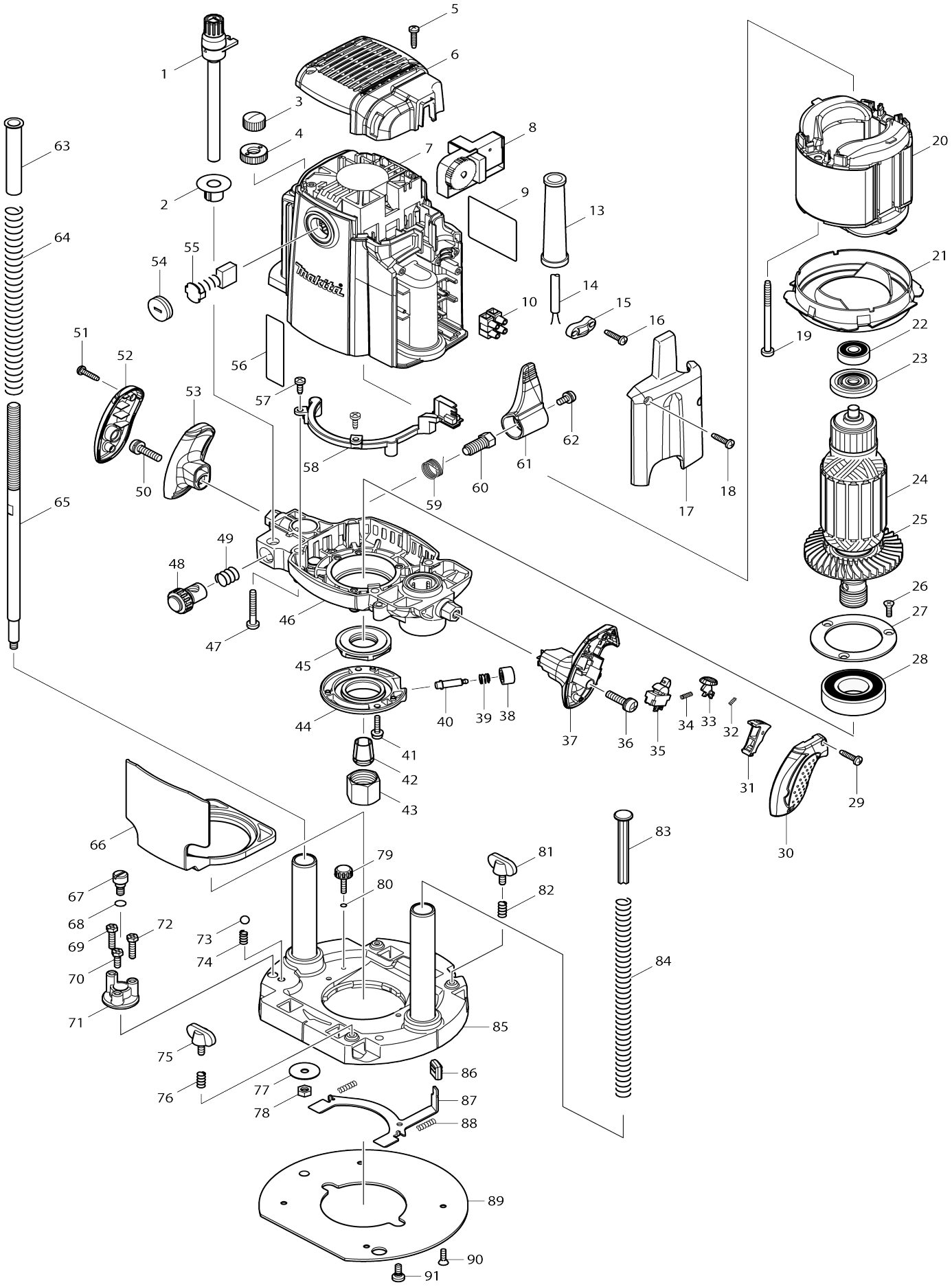

Model No.RP2300FC ROUTER

Item No.	Parts No.	Description	Interchangeability	Q'ty	New/ Old	Note1	Note2
001	125542-4	THUMB SCREW M10X115 ASS'Y		1			
002	450946-4	DEPTH POINTER		1			
003	252643-6	WING NUT M10		1			
004	410129-8	NYLON NUT M10		1			
005	265995-6	TAPPING SCREW 4X18		2			
006	450947-2	REAR COVER		1			
007	158977-4	MOTOR HOUSING COMPLETE		1			
C10	643707-1	BRUSH HOLDER		2			
C20	638647-6	SUPPORT UNIT		1			
C30	816923-0	SCALE LABEL		1	*		
008	631859-0	CONTROLLER		1	*		
008-1	620081-4	CONTROLLER	<	1			
009	866377-1	RP2300FC NAME PLATE		1	*		
009-1	811N10-4	RP2300FC NAME PLATE	O	1			
010	654531-7	TERMINAL BLOCK 2P		1			
013	682505-8	CORD GUARD 10-90		1			
014	695123-3	POWER SUPPLY CORD 1.5-2-4.0		1			
015	687053-2	STRAIN RELIEF		1			
016	265995-6	TAPPING SCREW 4X18		2			
017	450949-8	COVER		1			
018	265995-6	TAPPING SCREW 4X18		2			
019	266059-9	TAPPING SCREW 5X75		2			
020	636344-8	FIELD 240V		1			
021	450944-8	BUFFLE PLATE		1	*		
021-1	4131R0-7	BAFFLE PLATE	<	1			
022	211092-6	BALL BEARING 629DDW		1			
023	681631-0	INSULATION WASHER		1			
024	517808-0	ARMATURE ASS'Y 220-240V		1			
024		INC. 22,23,25					
025	240112-9	FAN 80		1			
026	251295-0	+ COUNTERSUNK HEAD SCREW M4X14		3			
027	285731-4	BEARING RETAINER 60		1			
028	211380-1	BALL BEARING 6205DDW		1			
029	265995-6	TAPPING SCREW 4X18		2			
030	450937-5	GRIP COVER R		1			
031	450940-6	SWITCH LEVER		1	*		
031-1	450940-6	SWITCH LEVER	<	1			
032	233024-3	COMPRESSION SPRING 4		1			
033	450941-4	LOCK OFF BUTTON		1			
034	231372-4	COMPRESSION SPRING 5		1			
035	651432-0	SWITCH		1			
036	911343-4	PAN HEAD SCREW M6X25		1			
037	450936-7	GRIP R		1			
038	450942-2	PUSH BUTTON		1			
039	233072-2	COMPRESSION SPRING 8		1			
040	268234-3	COLLARED PIN 6		1			
041	911133-5	PAN HEAD SCREW M4X18		2			

042	763628-2	COLLET CONE 12MM		1			
043	763674-5	COLLET NUT		1			
044	318382-9	RETAINER COVER		1			
045	285849-1	RETAINER		1			
046	158972-4	MOTOR BRACKET COMPLETE		1			
047	266012-5	TAPPING SCREW 5X35		4			
048	153476-1	HALF NUT COMPLETE		1			
049	231231-2	COMPRESSION SPRING 12		1			
050	911343-4	PAN HEAD SCREW M6X25		1			
051	265995-6	TAPPING SCREW 4X18		2			
052	450939-1	GRIP COVER L		1			
053	450938-3	GRIP L		1			
054	643700-5	BRUSH HOLDER CAP 7-18		2			
055	191953-5	CARBON BRUSH CB-203		1	*		
055-1	194991-6	CARBON BRUSH SET CB203	O	1			
056	816926-4	INDICATION LABEL		1			
057	266026-4	TAPPING SCREW BIND CT 4X12		2			
058	631862-1	LED CIRCUIT		1			
059	233538-2	TORSION SPRING 15		1			
060	266015-9	SET BOLT M10		1	*		
060-1	265C75-6	SET BOLT M10	O	1			
061	450950-3	LOCK LEVER		1			
062	911213-7	PAN HEAD SCREW M5X12		1			
063	450943-0	SILENT POLE		1			
064	234106-4	COMPRESSION SPRING 13		1			
065	325652-9	SCREW M10		1			
066	450953-7	TIP DEFLECTOR		1			
067	251467-7	- FLAT HEAD SCREW M6		1			
068	213030-4	O RING 8		1			
069	265587-1	+HEX. BOLT M5X20		1			
070	265586-3	+HEX. BOLT M5X14		1			
071	315931-3	STOPPER		1			
072	265587-1	+HEX. BOLT M5X20		1			
073	216009-4	STEEL BALL 7.1		1			
074	231419-4	COMPRESSION SPRING 5		1			
075	265720-5	THUMB SCREW M5X14		1			
076	231240-1	COMPRESSION SPRING 7		1			
077	253783-3	FLAT WASHER 6		1			
078	931303-0	HEX. NUT M6		1			
079	265774-2	THUMB SCREW M4X19		1			
080	213022-3	O RING 3		1			
081	265720-5	THUMB SCREW M5X14		1			
082	231240-1	COMPRESSION SPRING 7		1			
083	417252-0	POLE		1			
084	234105-6	COMPRESSION SPRING 11		1			
085	158973-2	BASE COMPLETE		1			
086	424176-3	CAP 14		1			
087	346032-6	LOCK PLATE		1			
088	233105-3	COMPRESSION SPRING 4		2			
089	450951-1	BASE PLATE		1			
090	912112-6	COUNTERSUNK HEAD SCREW M4 X10		4			

091	266016-7	SET BOLT M5X10		2			
A01	122850-4	DUST NOZZLE ASS'Y		1			
C10	213022-3	O RING 3		1			
C20	265774-2	THUMB SCREW M4X19		1			
A02	266491-7	+PAN HEAD SCREW M6X135		1	*		
A02-1	265C70-6	+PAN HEAD SCREW M6X135 WIT H R	S	1			
A03	763801-4	COLLET SLEEVE FOR 6 MM BIT		1			
A04	763804-8	COLLET SLEEVE FOR 8 MM BIT		1			
A05	781030-7	WRENCH 24		1			
A06	941152-7	FLAT WASHER 6		1	*		
A07	194732-0	STRAIGHT GUIDE SET		1	*		
C11	125543-2	THUMB SCREW M10X52 ASS'Y		1	*		
C16	231399-4	COMPRESSION SPRING 15		1	*		
C21	251870-2	SCREW M6X50		1	*		
C26	256864-2	ROD 10		2	*		
C31	257284-3	RING 10		1	*		
C36	265720-5	THUMB SCREW M5X14		2	*		
C41	266035-3	TAPPING SCREW BIND CT 5X12		1	*		
C46	267070-4	FLAT WASHER 10		2	*		
C51	267209-9	FLAT WASHER 5		1	*		
C56	318383-7	STRAIGHT GUIDE		1	*		
C61	318384-5	GUIDE HOLDER		1	*		
C66	346069-3	PRESSURE PLATE		1	*		
C71	450954-5	GUIDE SHOE		2	*		
C76	819284-7	MAKITA LOGO LABEL		1	*		
C81	911129-6	PAN HEAD SCREW M4X16		4	*		
C86	961012-7	STOP RING E-6		1	*		
A07-1	194935-6	STRAIGHT GUIDE SET	<	1			
C11	125582-2	THUMB SCREW M10X52 ASS'Y		1			
C16	231399-4	COMPRESSION SPRING 15		1			
C21	251870-2	SCREW M6X50		1			
C26	256864-2	ROD 10		2			
C31	257284-3	RING 10		1			
C36	265720-5	THUMB SCREW M5X14		2			
C41	266035-3	TAPPING SCREW BIND CT 5X12		1			
C46	267070-4	FLAT WASHER 10		1			
C51	267209-9	FLAT WASHER 5		1			
C56	318383-7	STRAIGHT GUIDE		1			
C61	318384-5	GUIDE HOLDER		1			
C66	346069-3	PRESSURE PLATE		1			
C71	450954-5	GUIDE SHOE		2			
C76	819284-7	MAKITA LOGO LABEL		1			
C81	911129-6	PAN HEAD SCREW M4X16		4			
C86	961012-7	STOP RING E-6		1			
C91	941251-5	FLAT WASHER 10		1			
A08	821552-6	CONNECTOR PLASTIC CASE (TYP E4)		1	*		
C10	453974-8	LATCH		4	*		
A08-1	821552-6	CONNECTOR PLASTIC CASE (TYP E4)	<	1			
C10	453974-8	LATCH		4			

A09	837647-5	INNER TRAY		1			
A10	801E77-6	RP2300FCXJ INDICATION LABEL		1			
A11	801E78-4	RP2300FCXJ PLASTIC CASE LABEL		2			
F01	199140-0	GUIDE RAIL 1000 SET		1			
F02	199141-8	GUIDE RAIL 1500 SET		1			
F03	194368-5	GUIDE RAIL 1400 SET		1			
F04	194925-9	GUIDE RAIL 1900 SET		1			
F05	194367-7	GUIDE RAIL 3000 SET		1			
F06	194416-0	SHEET 10000 SET		1			
F07	194417-8	RUBBER SHEET 10000 SET		1			
F08	194418-6	POSITION SHEET 1400 SET		1			
F09	194910-2	POSITION SHEET 1900 SET		1			
F69	194934-8	DUST NOZZLE SET		1			
F72	195136-9	STRAIGHT GUIDE SET		1			
F73	195137-7	ROD 8 SET		1			

Please state Parts No. when your order.

Print Date 17/10/2024