Model No.VC003GL CORDLESS VACUUM CLEANER

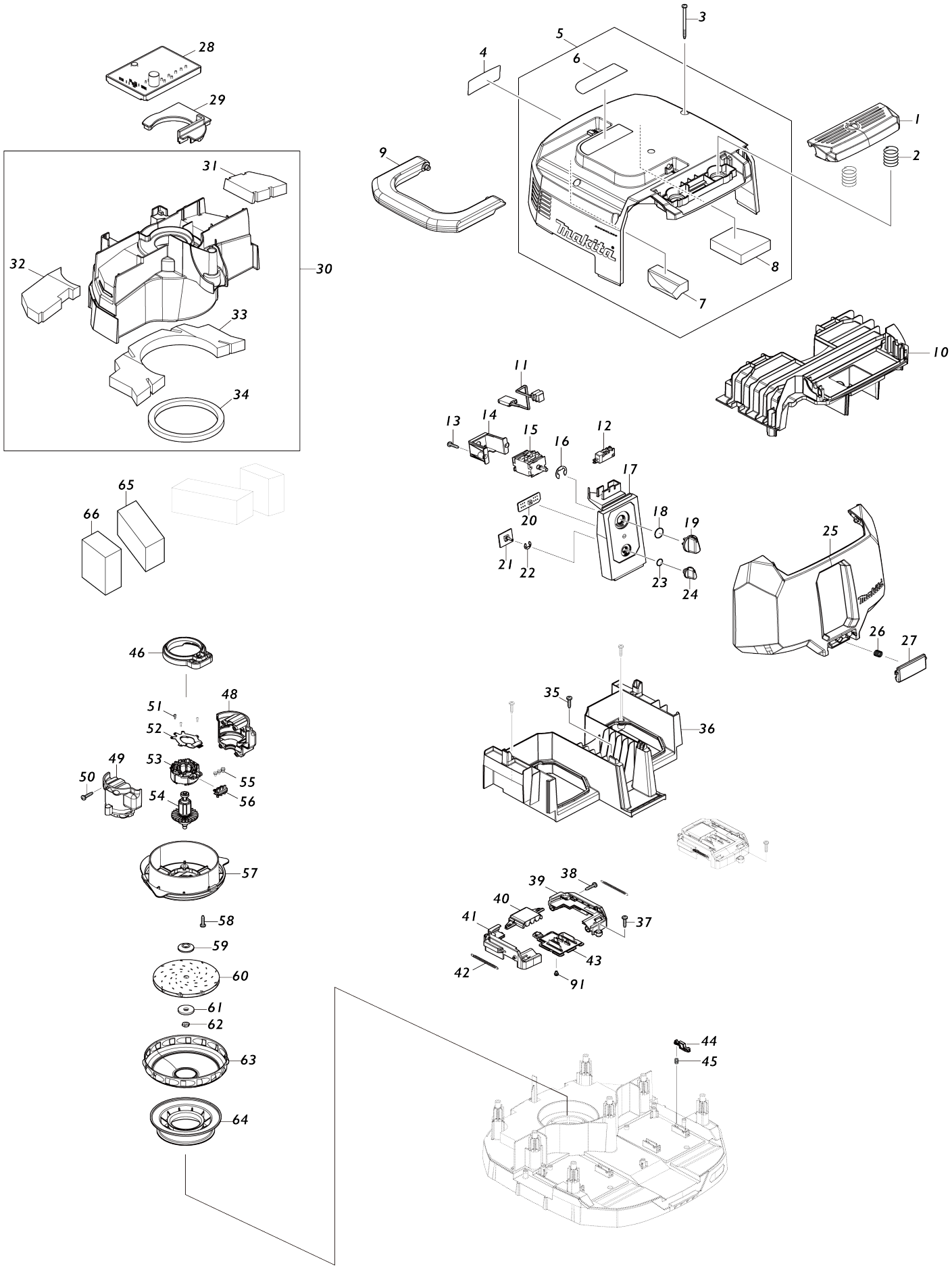

Model No.VC003GL CORDLESS VACUUM CLEANER

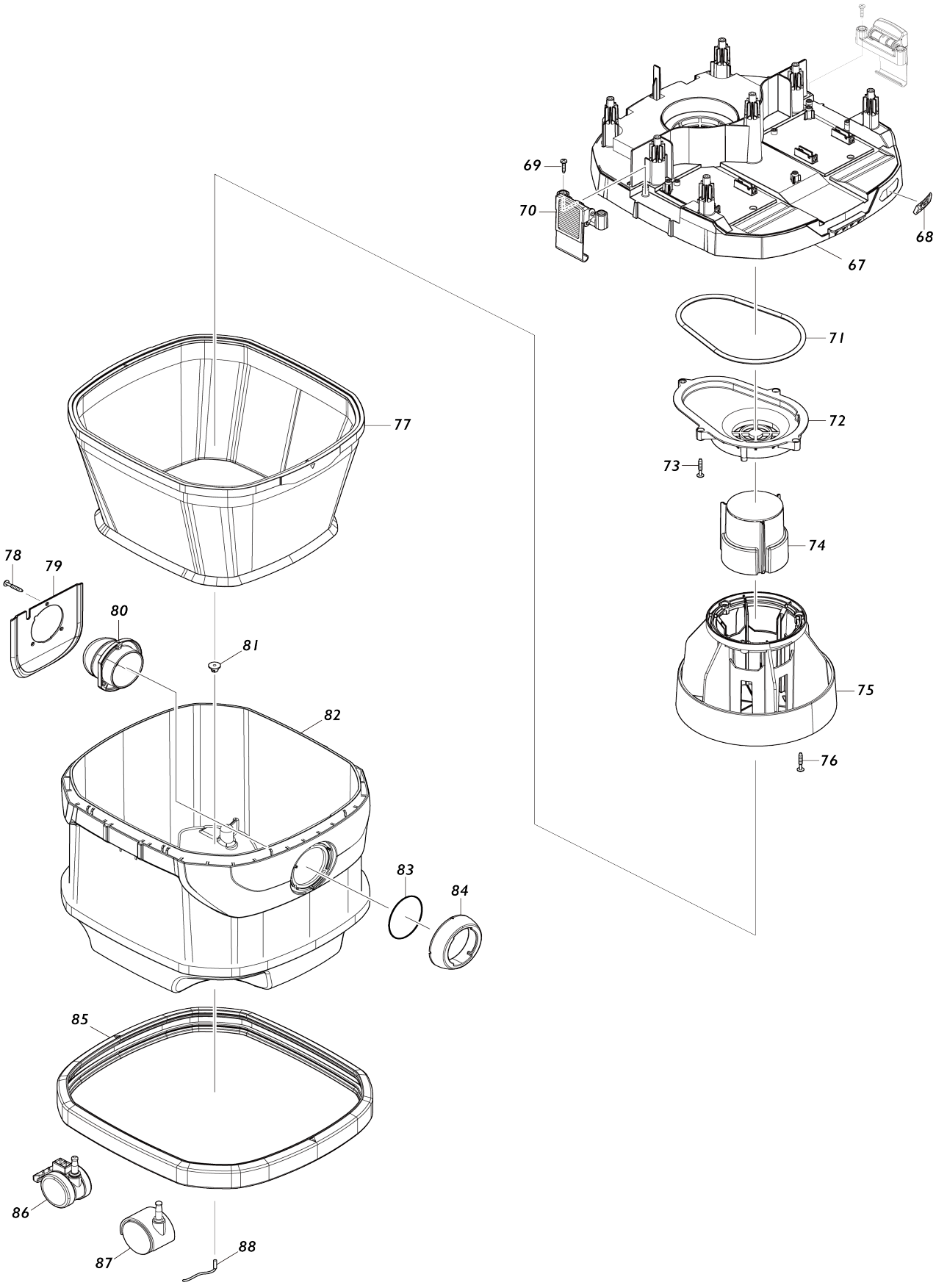

# Model No.VC003GL CORDLESS VACUUM CLEANER

| Item No. | Parts No. | Description | Interchangeability | Q'ty | New/ Old | Note1 | Note2 |
|---|---|---|---|---|---|---|---|
| 001 | 413B26-9 | SWITCH BUTTON | | 1 | | | |
| 002 | 234273-5 | COMPRESSION SPRING 20 | | 2 | | | |
| 003 | 266340-8 | TAPPING SCREW 4X65 | | 7 | | | |
| 004 | 8112L2-5 | VC003GL NAME PLATE | | 1 | | | |
| 005 | 141F78-1 | COWLING COMPLETE | | 1 | | | |
| 005 | | INC. 6-8 | | | | | |
| 006 | 813A18-6 | CAUTION LABEL | | 1 | | | |
| 007 | 422796-7 | TOP DAMPER A | | 1 | | | |
| 008 | 422797-5 | TOP DAMPER B | | 1 | | | |
| 009 | 413B27-7 | GRIP | | 1 | | | |
| 010 | 413B33-2 | UPPER HOUSING | | 1 | | | |
| 011 | 638A20-6 | LEAD UNIT | | 1 | | | |
| 012 | 651910-0 | SWITCH D2VW-01-3HS | | 1 | | | |
| 013 | 266326-2 | TAPPING SCREW 4X18 | | 2 | | | |
| 014 | 451343-7 | SWITCH HOLDER | | 1 | | | |
| 015 | 650013-7 | SWITCH 1703.4002 | | 1 | | | |
| 016 | 961062-2 | STOP RING E-12 | | 1 | | | |
| 017 | 141F75-7 | SWITCH BASE COMPLETE | | 1 | | | |
| C10 | 8040N1-6 | INDICATION LABEL | | 1 | | | |
| 018 | 213176-6 | O RING 14 | | 1 | | | |
| 019 | 455733-6 | SWITCH LEVER | | 1 | | | |
| 020 | 620F40-4 | INDICATION CIRCUIT | | 1 | | | |
| 021 | 620D39-7 | SUB CONTROLLER | | 1 | | | |
| 022 | 961013-5 | STOP RING E-7 | | 1 | | | |
| 023 | 213054-0 | O RING 9 | | 1 | | | |
| 024 | 451344-5 | SWITCH DIAL | | 1 | | | |
| 025 | 413B28-5 | BATTERY COVER | | 1 | | | |
| 026 | 231456-8 | COMPRESSION SPRING 7 | | 1 | | | |
| 027 | 413B30-8 | BATTERY COVER HOOK | | 1 | | | |
| 028 | 620F37-3 | CONTROLLER | | 1 | | | |
| 029 | 422795-9 | RUBBER CAP | | 1 | | | |
| 030 | 141F84-6 | SEPARATOR COMPLETE | | 1 | | | |
| 030 | | INC. 31-34 | | | | | |
| 031 | 422802-8 | BAND DUMPER E | | 1 | | | |
| 032 | 422801-0 | BAND DUMPER D | | 1 | | | |
| 033 | 422799-1 | BAND DUMPER B | | 1 | | | |
| 034 | 422804-4 | SEAL A | | 1 | | | |
| 035 | 266326-2 | TAPPING SCREW 4X18 | | 3 | | | |
| 036 | 413B31-6 | LOWER HOUSING | | 1 | | | |
| 037 | 266326-2 | TAPPING SCREW 4X18 | | 4 | | | |
| 038 | 266326-2 | TAPPING SCREW 4X18 | | 4 | | | |
| 039 | 183U06-0 | TERMINAL CASE SET | | 2 | | | |
| 039 | | INC. 41 | | | | | |
| 040 | 413B40-5 | TERMINAL COVER | | 2 | | | |
| 041 | 183U06-0 | TERMINAL CASE SET | | 2 | | | |
| 041 | | INC. 39 | | | | | |
| 042 | 232722-6 | TENSION SPRING 4 | | 4 | | | |
| | | | | | | | |

| | | | | | | | |
|---|---|---|---|---|---|---|---|
| 043 | 632T08-2 | TERMINAL UNIT | | 2 | | | |
| 044 | 413B41-3 | LOCK LEVER | | 4 | | | |
| 045 | 232472-3 | COMPRESSION SPRING 2 | | 4 | | | |
| 046 | 422794-1 | RUBBER RING | | 1 | | | |
| 048 | 183U05-2 | MOTOR HOUSING SET | | 1 | | | |
| 048 | | INC. 49 | | | | | |
| 049 | 183U05-2 | MOTOR HOUSING SET | | 1 | | | |
| 049 | | INC. 48 | | | | | |
| 050 | 266326-2 | TAPPING SCREW 4X18 | | 4 | | | |
| 051 | 266490-9 | TAPPING SCREW PT 2X6 | | 3 | | | |
| 052 | 620F39-9 | CONTROLLER B | | 1 | | | |
| 053 | 629A83-3 | STATOR | | 1 | | | |
| 054 | 619704-9 | ROTOR | | 1 | | | |
| 055 | 652069-6 | FLAT HEAD SCREW M3X6 | | 3 | | | |
| 056 | 632S88-2 | LEAD UNIT | | 1 | | | |
| 057 | 413B45-5 | FAN BASE | | 1 | | | |
| 058 | 266326-2 | TAPPING SCREW 4X18 | | 3 | | | |
| 059 | 313062-2 | FLANGE | | 1 | | | |
| 060 | 240178-9 | FAN 104 | | 1 | | | |
| 061 | 253752-4 | FLAT WASHER 8 | | 1 | | | |
| 062 | 252268-6 | HEX. NUT M6 | | 1 | | | |
| 063 | 347171-5 | FAN COVER | | 1 | | | |
| 064 | 422793-3 | SUPPORT RING | | 1 | | | |
| 065 | 422803-6 | REAR BLOCK FILTER A | | 2 | | | |
| 066 | 422819-1 | REAR BLOCK FILTER B | | 2 | | | |
| 067 | 141F83-8 | TANK COVER COMPLETE | | 1 | | | |
| C10 | 422798-3 | BAND DUMPER A | | 1 | | | |
| 068 | 8030S0-0 | XGT LOGO LABEL | | 1 | | | |
| 069 | 266326-2 | TAPPING SCREW 4X18 | | 4 | | | |
| 070 | 162A10-2 | HOOK COMPLETE | | 2 | | | |
| 071 | 422805-2 | SEAL RING | | 1 | | | |
| 072 | 413B22-7 | LOWER TANK COVER | | 1 | | | |
| 073 | 266374-1 | TAPPING SCREW 4X25 | | 4 | | | |
| 074 | 144627-7 | FLOAT COMPLETE | | 1 | | | |
| 075 | 457845-1 | FLOAT CAGE | | 1 | | | |
| 076 | 266374-1 | TAPPING SCREW 4X25 | | 3 | | | |
| 077 | 144625-1 | CLOTH FILTER COMPLETE | | 1 | | | |
| 078 | 266374-1 | TAPPING SCREW 4X25 | | 3 | | | |
| 079 | 457853-2 | HOLDER PLATE | | 1 | | | |
| 080 | 457852-4 | HOLDER | | 1 | | | |
| 081 | 421468-1 | CORD SEAL | | 1 | | | |
| 082 | 457855-8 | TANK | | 1 | | | |
| 083 | 213655-4 | O RING 56 | | 1 | | | |
| 084 | 457851-6 | INLET | | 1 | | | |
| 085 | 422176-7 | BUMPER | | 1 | | | |
| 086 | 168535-8 | CASTER 50 | | 2 | * | | |
| 086-1 | 162C28-5 | CASTER 50 | O | 2 | | | |
| 087 | 168434-4 | CASTER 50 | | 2 | * | | |
| 087-1 | 162C27-7 | CASTER 50 | O | 2 | | | |
| 088 | 649150-2 | EARTH LINE 120 | | 1 | | | |
| 091 | 652031-1 | PAN HEAD SCREW M3X6 | | 4 | | | |
| A01 | 191G86-8 | NOZZLE ASSEMBLY SET | | 1 | | | |

| | | | | | | | |
|---|---|---|---|---|---|---|---|
| A02 | 140G19-0 | TELESCOPIC PIPE COMPLETE | | 1 | | | |
| A03 | 140G26-3 | BENT PIPE COMPLETE | | 1 | | | |
| A04 | 199493-7 | HOSE COMPLETE 32-1.7 SET | | 1 | | | |
| A05 | 195432-5 | POLY BAG SET(650X650) | | 1 | | | |
| A06 | 413B37-4 | MULTI HOOK | | 1 | | | |
| A07 | 451350-0 | STOPPER | | 1 | | | |
| A08 | 198919-6 | LONG SASH NOZZLE SET 28 WHI | | 1 | | | |
| A09 | 911133-5 | PAN HEAD SCREW M4X18 | | 1 | | | |
| E01 | 891978-6 | CAUTION LABEL | | 1 | | | |
| F15 | 191E30-3 | FLEXIBLE HOSE SET(LOCK) | | 1 | | | |
| F17 | 191G87-6 | NOZZLE ASSEMBLY SET | | 1 | | | |
| F18 | 191G89-2 | TELESCOPIC PIPE SET | | 1 | | | |
| F19 | 191M77-5 | JOINT A 32 SET | | 1 | | | |
| F20 | 191M78-3 | JOINT B 35 SET | | 1 | | | |
| F21 | 191M79-1 | JOINT C 38 SET | | 1 | | | |
| F22 | 191V67-2 | FILTER FOR WATER SET | | 1 | | | |
| F23 | 191V68-0 | DAMPER SET | | 1 | | | |
| F24 | 191V69-8 | PRE FILTER SET | | 1 | | | |
| F25 | 191V70-3 | POWDER FILTER H SET | | 1 | | | |
| F28 | 192236-6 | TAPERED NOZZLE SET | | 1 | | | |
| F31 | 195432-5 | POLY BAG SET(650X650) | | 1 | | | |
| F34 | 195435-9 | HOSE COMPLETE 38-5 SET | | 1 | | | |
| F35 | 195436-7 | HOSE COMPLETE 28-5 SET | | 1 | | | |
| F36 | 195437-5 | HOSE COMPLETE 28-2.5 SET | | 1 | | | |
| F38 | 195545-2 | FRONT CUFF 38 SET | | 1 | | | |
| F39 | 195546-0 | FRONT CUFF 24 SET | | 1 | | | |
| F40 | 195547-8 | FRONT CUFF 22 SET | | 1 | | | |
| F41 | 195548-6 | JOINT 22-38 SET | | 1 | | | |
| F42 | 195549-4 | T-NOZZLE ASSY A SET(DRY)38 | | 1 | | | |
| F43 | 195550-9 | T-NOZZLE ASSY B SET(WET)38 | | 1 | | | |
| F44 | 195551-7 | T-NOZZLE SET 38 | | 1 | | | |
| F45 | 195557-5 | FILTER BAG SET 15L(5PCS) | | 1 | * | | |
| F45-1 | 195557-5 | FILTER BAG SET 15L(5PCS) | O | 1 | | | |
| F49 | 198184-7 | F/C SWITCHING T-NOZZLE 38 | | 1 | | | |
| F53 | 198529-9 | FLOOR/CARPET T-NOZZLE BLK E U | | 1 | | | |
| F55 | 198533-8 | F/C SWITCHING T-NOZZLE 38 EU | | 1 | | | |
| F56 | 198540-1 | SHELF BRUSH SET28 BLK EU | | 1 | | | |
| F57 | 198555-8 | ROUND BRUSH SET 28 BLK EU | | 1 | | | |
| F59 | 198560-5 | TELESCOPIC PIPE SET 28 EU | | 1 | | | |
| F60 | 198730-6 | MAKPAC ADAPTER SET | | 1 | * | | |
| F62 | 198873-4 | SHELF BRUSH SET28 WHI | | 1 | | | |
| F63 | 198878-4 | ROUND BRUSH SET 28 WHI | | 1 | | | |
| F64 | 198919-6 | LONG SASH NOZZLE SET 28 WHI | | 1 | | | |
| F65 | 198992-6 | LONG SASH NOZZLE SET 28 BLK | | 1 | | | |
| F66 | 199038-1 | SEAT NOZZLE SET 28 WHI | | 1 | | | |
| F67 | 199039-9 | SEAT NOZZLE SET 28 BLK | | 1 | | | |
| F69 | 199439-3 | CREVICE NOZZLE 415 SET | | 1 | | | |
| F73 | 199843-6 | PIPE 465 COMPLETE SET | | 1 | | | |
| F74 | 199844-4 | JOINT PIPE 465 SET | | 1 | | | |
| F88 | 1914Y6-9 | Rotary brush nozzle set | | 1 | | | |
| F89 | 1914Y7-7 | Rotary brush nozzle set | | 1 | | | |

| | | | | | | | |
|---|---|---|---|---|---|---|---|
| G09 | 1912G4-5 | TELESCOPIC PIPE COMPLETE SET | | 1 | | | |
| G10 | 1912G5-3 | BENT PIPE COMPLETE SET | | 1 | | | |
| G11 | 413R35-4 | STOPPER | | 1 | | | |

Please state Parts No. when your order.

Print Date 05/30/2025