Model No.6413 DRILL 10MM

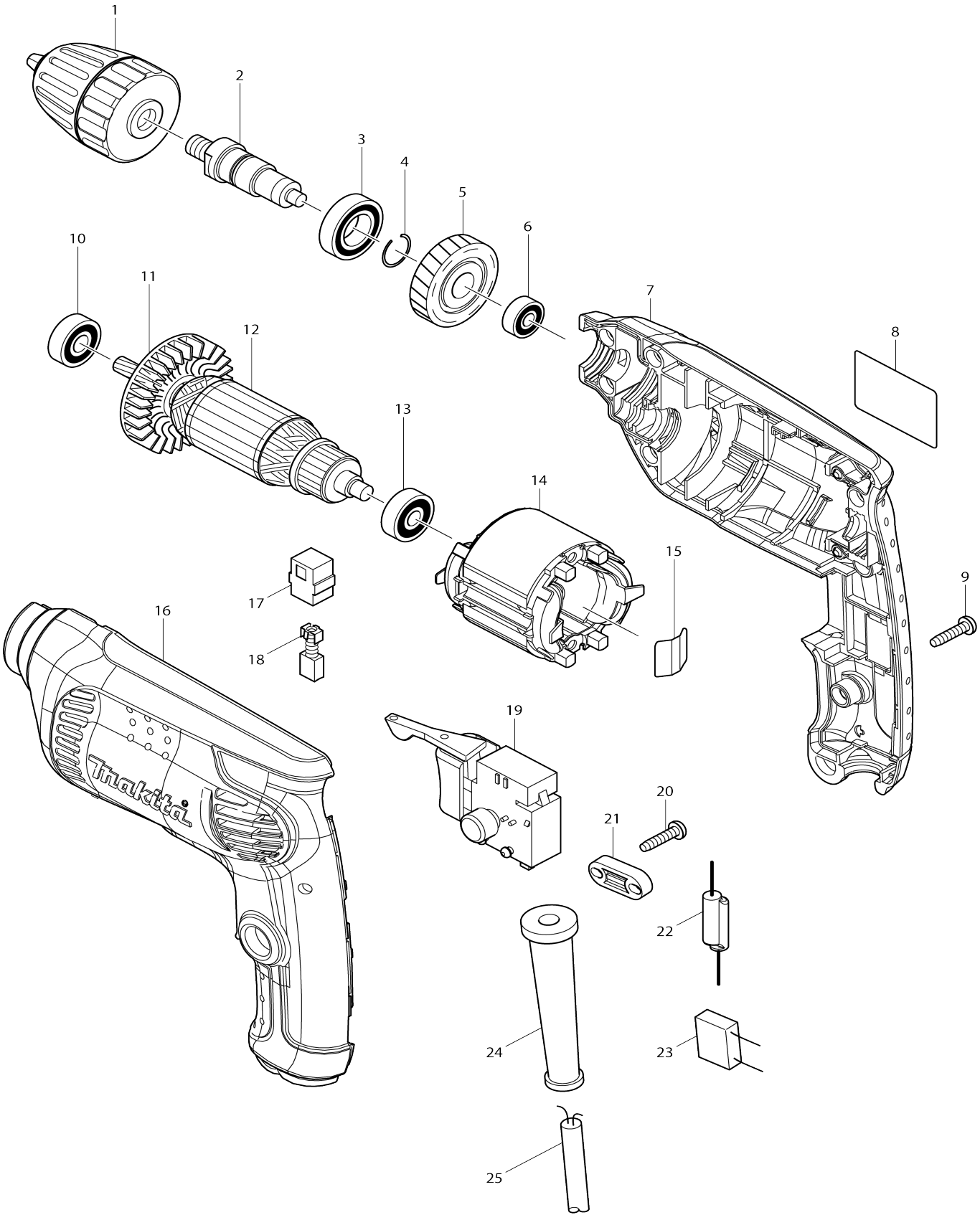

Model No.6413 DRILL 10MM

Item No.	Parts No.	Description	Interchangeability	Q'ty	New/ Old	Note1	Note2
001	763180-0	KEYLESS DRILL CHUCK 10		1	*		
001-1	763242-4	KEYLESS DRILL CHUCK 10	<	1			
002	324376-4	SPINDLE		1			
003	211242-3	BALL BEARING 6902ZZ		1			
004	233925-5	RING SPRING 13		1			
005	226578-7	HELICAL GEAR 35		1			
006	210028-2	BALL BEARING 606ZZ		1			
007	188277-8	HOUSING SET		1			
C10	263002-9	RUBBER PIN 4		2			
007		INC. 16					
008	863402-9	6413 NAME PLATE		1			
009	266326-2	TAPPING SCREW 4X18		7			
010	211032-4	BALL BEARING 608ZZ		1	*		
010-1	210191-1	BALL BEARING 608ZZ	O	1			
011	240066-0	FAN 52		1			
012	515699-3	ARMATURE ASS'Y 240V		1	*		
012		INC. 10,11,13			*		
012-1	510434-4	ARMATURE ASS'Y 240V	O	1			
012-1		INC. 10,11,13					
013	210030-5	BALL BEARING 627ZZ		1			
014	599369-2	FIELD ASS'Y 240V		1			
C10	654037-5	INSULATED TERM. FT1.25-M3		1	*		
C12	654409-4	TERMINAL VR1.25-3.5LB	O	1			
015	232210-3	LEAF SPRING		1			
016	188277-8	HOUSING SET		1			
C10	263002-9	RUBBER PIN 4		2			
016		INC. 7					
017	643563-9	BRUSH HOLDER 5X8		2	*		
017-1	643566-3	BRUSH HOLDER 5X8	O	2			
018	191627-8	CARBON BRUSH CB-64		1	*		
018-1	194968-1	CARBON BRUSH SET CB-64	O	1			
019	650586-0	SWITCH DGQ-1104H		1			
020	266326-2	TAPPING SCREW 4X18		2			
021	687124-5	STRAIN RELIEF		1			
022	646151-1	CHOKE COIL		1			
023	645190-8	NOISE SUPPRESSOR		1			
024	682569-2	CORD GUARD 8-85		1			
025	665383-1	POWER SUPPLY CORD 1.0-2-2.0		1			

Please state Parts No. when your order.

Print Date 17/10/2024